Controller to Slew Drive

6+1 Pin FEM-DIN
Amphenol C016-30D006-100-12
REAR VIEW

LAURITZEN CABLE

COLOR	NAME	AZIMUTH	ELEVATION
BLK	MTR_PWR-	MAZ-	MEL-
RED	MTR_PWR+	MAZ+	MEL+
BRN/ORG	ENC_PWR+	+5V	+5V
WHI	ENC_CH0	AZ0	EL0
GRN	ENC_CH1	AZ1	EL1
BLU	ENC_PWR-	NEG	NEG

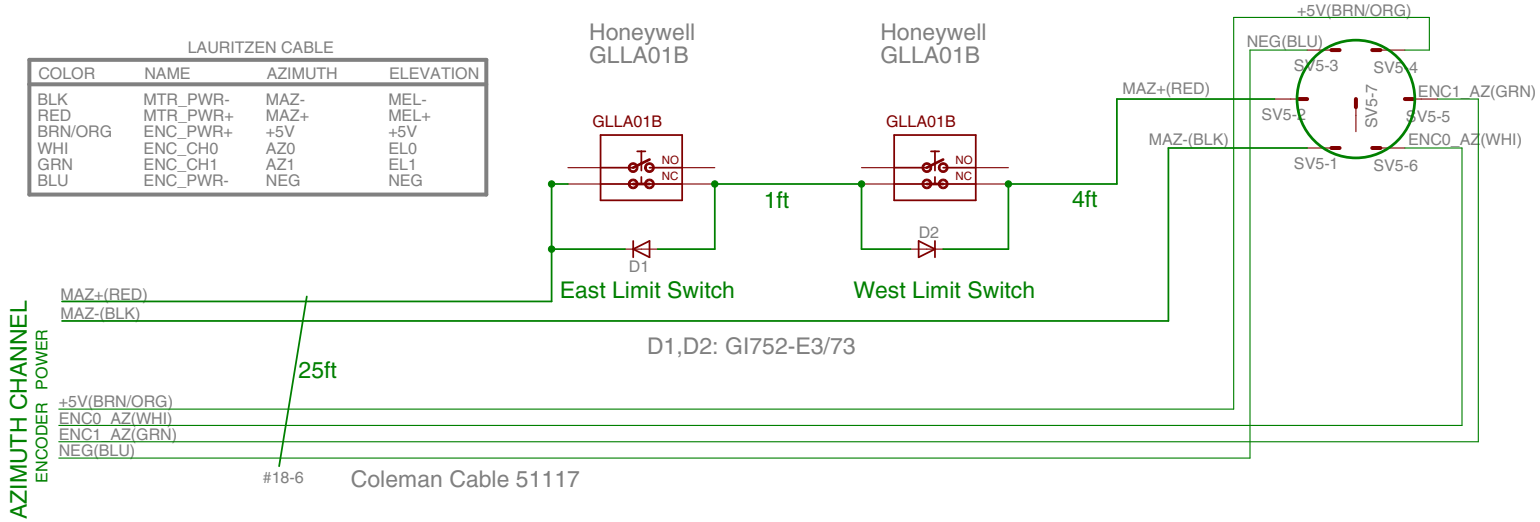

Cable to Motor wo. Encoder

REAR VIEW

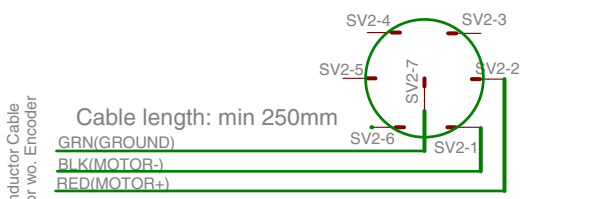

Amphenol C016 30H006 110 12
6+1 Pin MALE-DIN

Cable to Motor w. Encoder

REAR VIEW

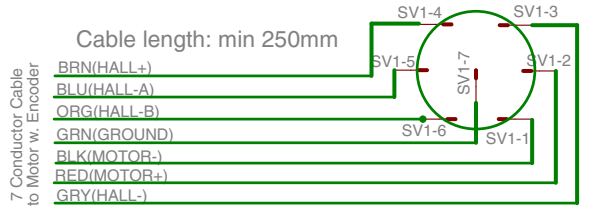

Amphenol C016 30H006 110 12
6+1 Pin MALE-DIN

22-6 Az Slew Drive Interface

TITLE: Application	
Document Number:	REV:
Date: 10/3/2018 12:53:05 PM	Sheet: 2/7